FC350W-500W-(DC-DC)

==========

- High reliability
- Built-in EMI filter
- 100% full load burn-in test
- Protections: overload/ short circuit
- 1 year warranty

==========

DC input voltage..... 48VDC, 110VDC
Line regulation (full load) ..... ≤±0.5%
Output voltage adjust range ..... ±10%
Output over current protection..... 110~130%
Output overvoltage protection ..... 115~150%
Withstand voltage ..... I/P -O/P: 1.0KVDC/1min
I/P -F/G: 1.0KVDC/1min
O/P-F/G: 0.5KVDC/1min
Isolation resistance ..... > 100MΩ@500VDC
Operating temp. & humidity..... -10℃~+50℃, 20%~90%RH (non condensing)
Storage temp. & humidity..... -20℃~+85℃, 20%~95%RH (non condensing)
Safety standards..... design refer to LVD
EMC standards ..... design refer to EN55022, EN61000-4
Cooling method ..... fan

Model	DC Output		Load regul.	R&N	Efficiency
HF800W-SD**-24	24V	35A	0.5%	240mV	82%
HF800W-SD**-30	30V	27A	0.5%	300mV	83%
HF800W-SD**-48	48V	17A	0.5%	480mV	84%
HF1000W-SD**-24	24V	35A	0.5%	240mV	82%
HF1000W-SD**-28	28V	30A	0.5%	240mV	83%
HF1000W-SD**-48	48V	21A	0.5%	480mV	84%

**means DC input voltage, such as 48, 110, etc.

公司地址：北京市西四南大街 86 号
电　　话：010　66035767；66020482
传　　真：010　66070752
网　　址：http//www.fc99.com
E－MAIL：　fc1@fc99.com
邮　　编：100034

安装图：

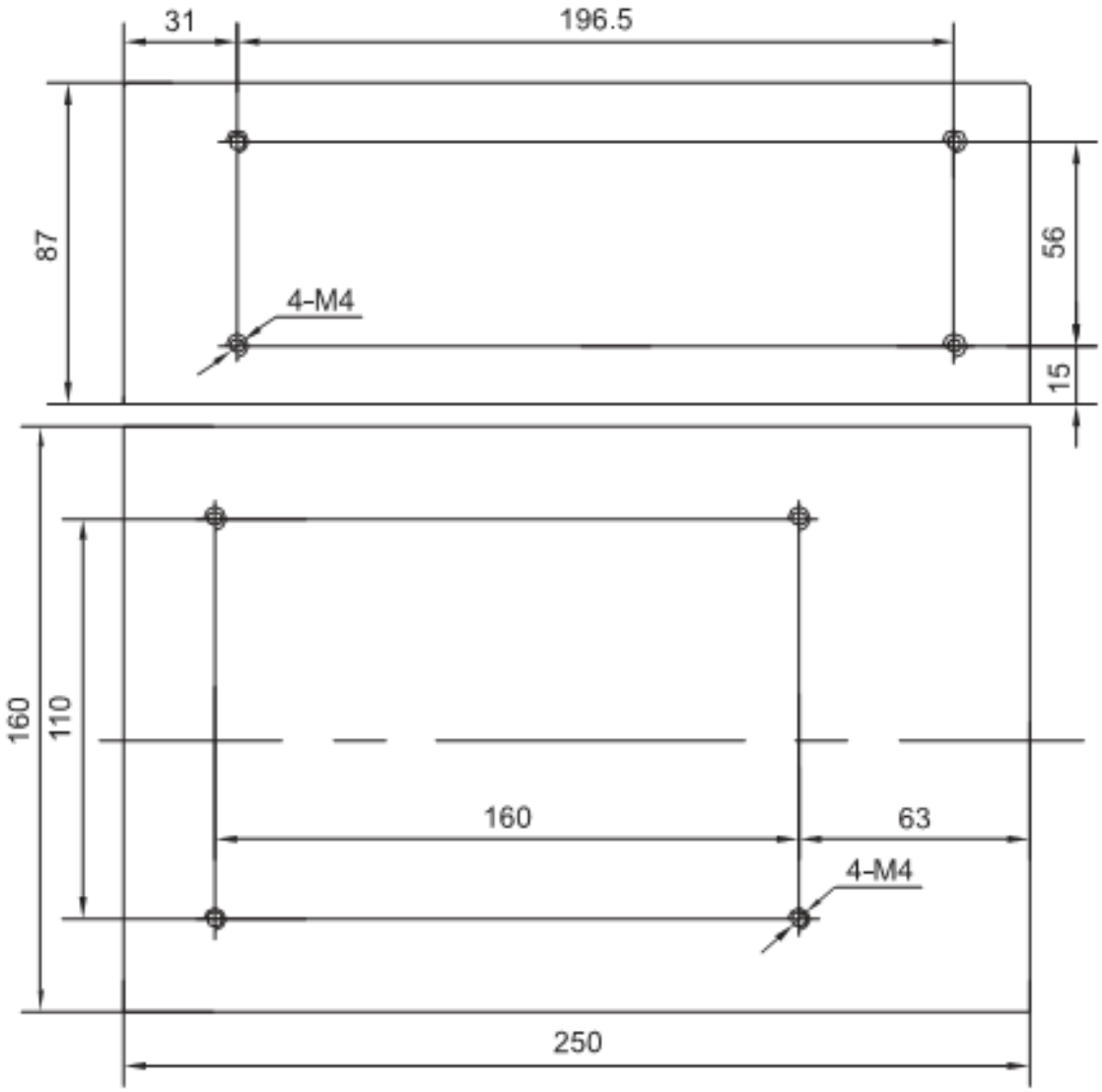

公司地址：北京市西四南大街 86 号
电　　话：010　66035767；66020482
传　　真：010　66070752
网　　址：http//www.fc99.com
E－MAIL：　fc1@fc99.com
邮　　编：100034